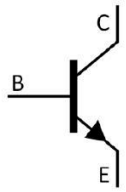
C
B
E

			℃
			℃

						μ
						μ

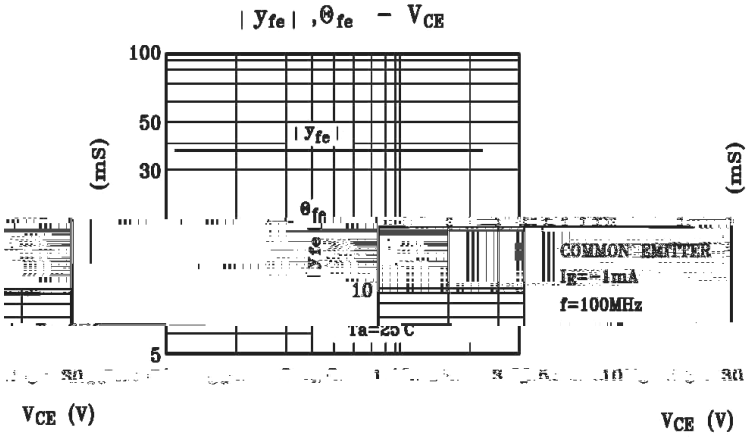
| yfe | ,θfe – VCE
100
50
30
10
5
(mS)
| yfe |
θfe
COMMON EMITTER
IE=-1mA
f=100MHz
Ta=25°C
VCE (V)

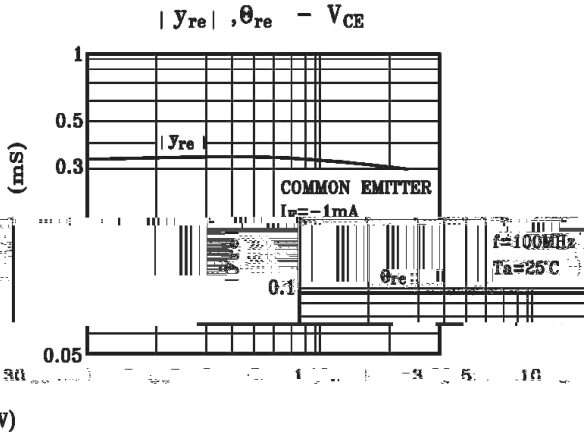
| yre | ,θre – VCE
1
0.5
0.3
0.1
0.05
(mS)
| yre |
COMMON EMITTER
IE=-1mA
f=100MHz
Ta=25°C
θre
VCE (V)

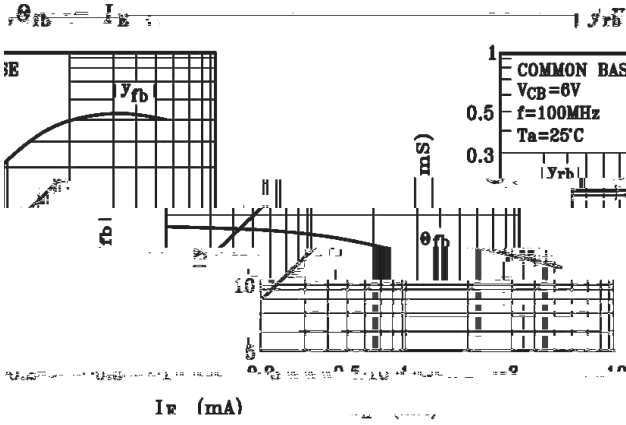
yfb
θfb
mS)
10
5
IE (mA)

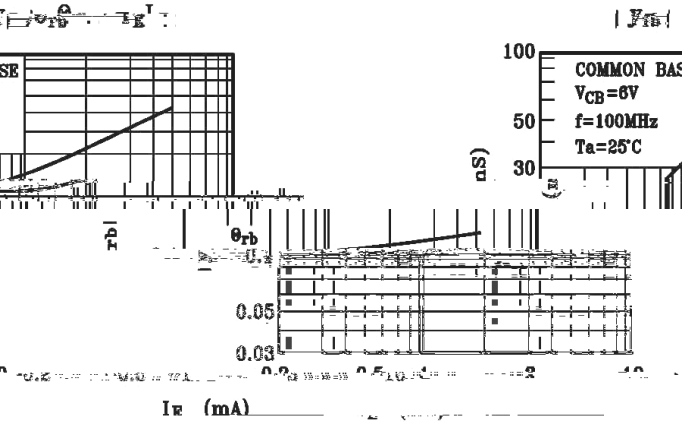
COMMON BASE
VCB=6V
f=100MHz
Ta=25°C
1
0.5
0.3
| yrb |
θrb
nS)
100
50
30
0.05
0.03
IE (mA)

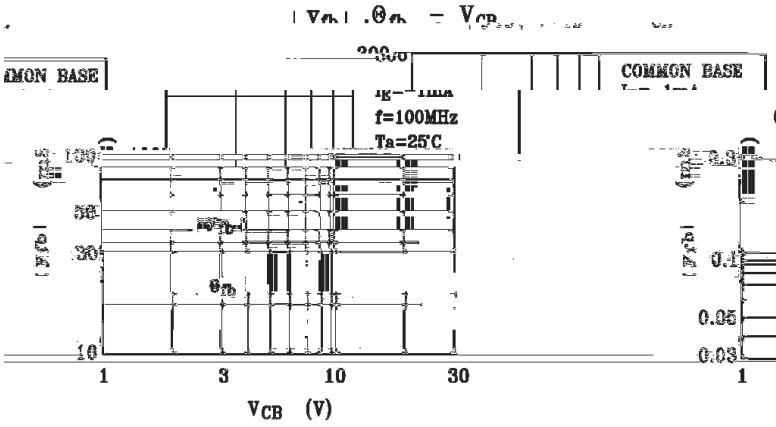
COMMON BASE
f=100MHz
Ta=25°C
θfb
1
3
10
30
VCB (V)

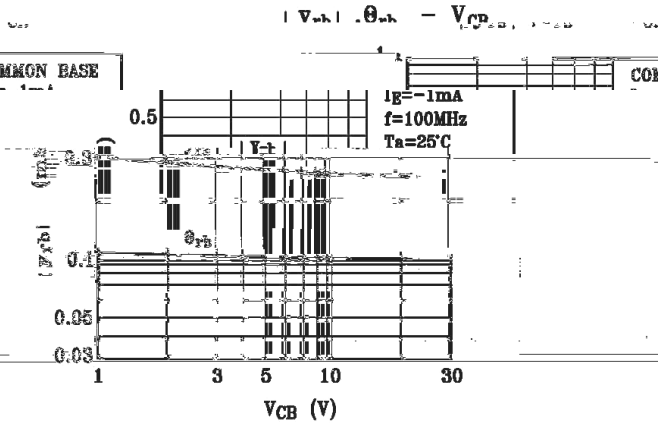
COMMON BASE
IE=-1mA
f=100MHz
Ta=25°C
0.5
0.1
0.05
0.03
θrb
1
3
5
10
30
VCB (V)

SOT-23

单位：mm

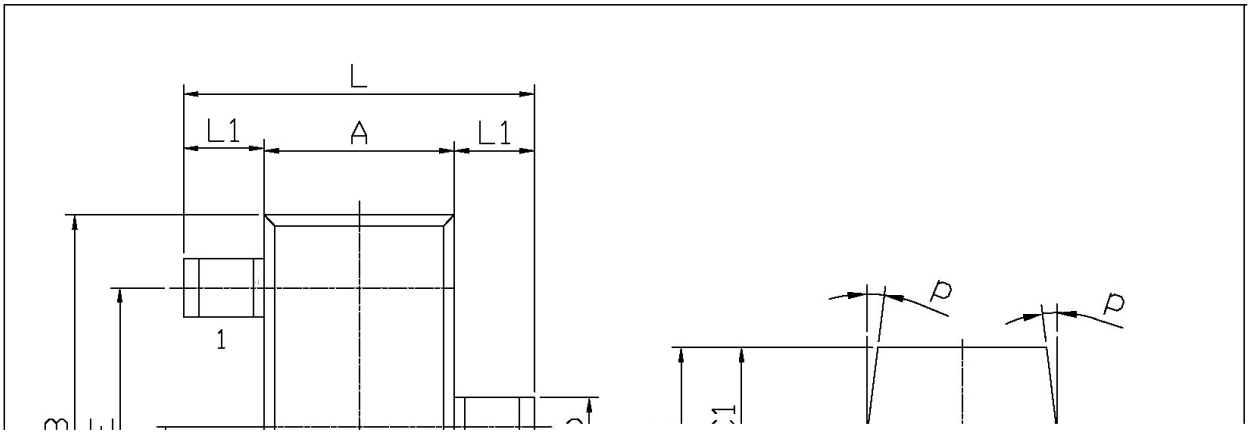

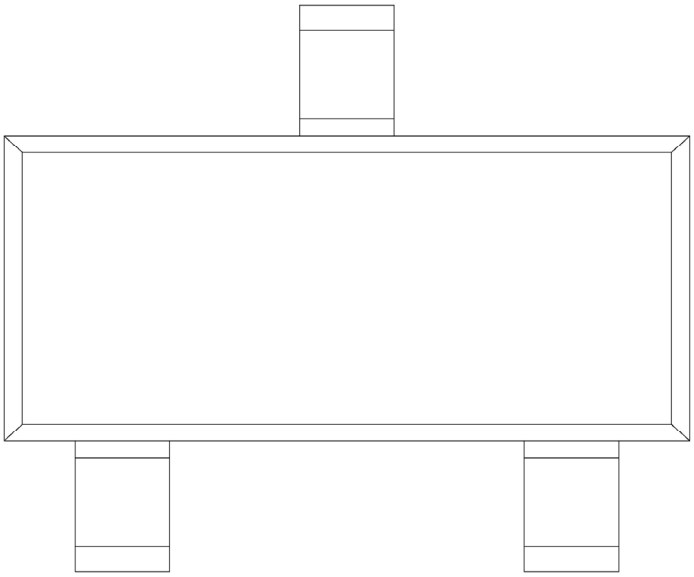

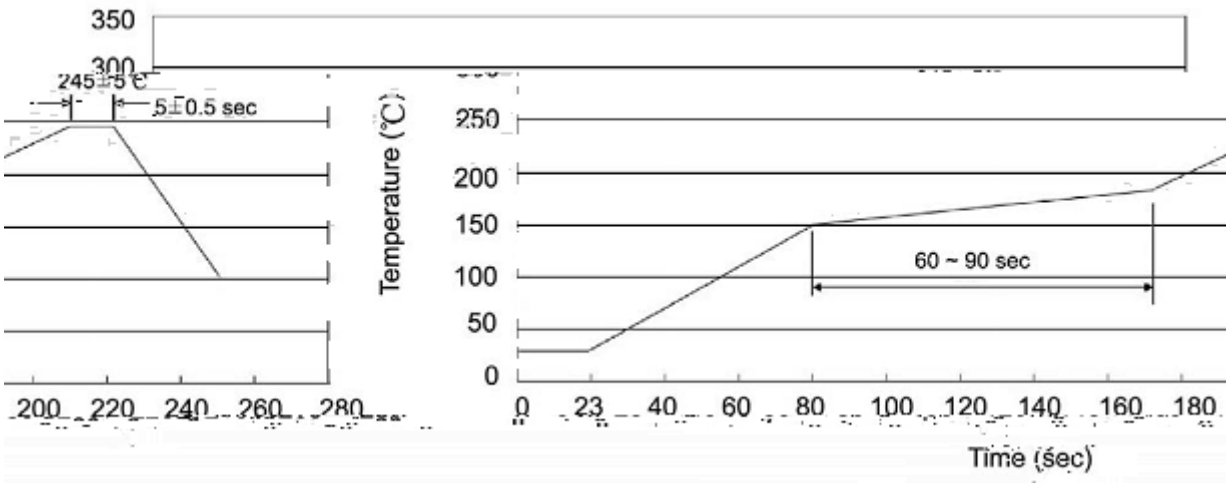
350
300
245±5 ℃
5±0.5 sec
Temperature (℃)
250
200
150
100
50
0
60 ~ 90 sec
200
220
240
260
280
0
23
40
60
80
100
120
140
160
180
Time (sec)